CHOPPER BUILDERS HANDBOOK

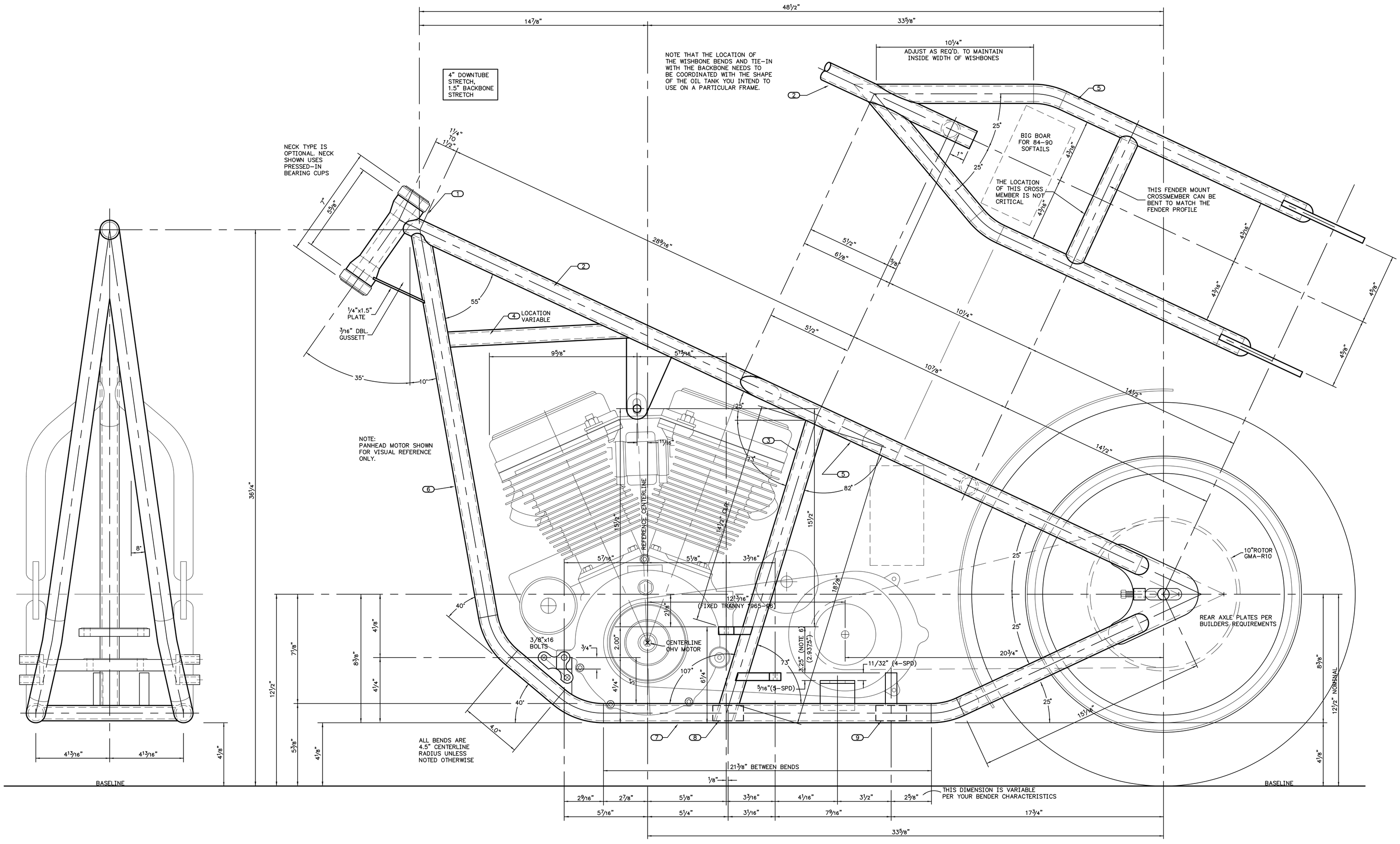

MATERIAL SCHEDULE

1	STEERING NECK	BY BUILDER	–
2	BACKBONE (TOP TUBE)	1.25x.120 ERW	34"
3	SEAT POST	1.25x.120 ERW	22"
4	NECK GUSSET TUBE	1.25x.120 ERW	18"
5	WISHBONE TUBES (2)	1.25x.120 ERW	36" EA.
6	DOWN TUBES (2)	1.25x.120 ERW	84" EA.
7	BOTTOM RAILS (2)	1.25x.120 ERW	
8	SEAT POST BRACE	1"x2"x.120 CR	12"
9	REAR TRANS BRACE	1"x2"x.120 CR	12"
10	WISHBONE BRACE	1.25x.120 ERW	12"

CUT LENGTHS SHOWN ARE NOMINAL AND PROVIDE AMPLE ALLOWANCES FOR FITTING AND NOTCHING.

HIGH PERFORMANCE APPLICATIONS USING MOTORS BEYOND STOCK DISPLACEMENTS REQUIRE THE SUBSTITUTION OF THE ERW TUBING FOR DOM TUBES HAVING THE SAME DIMENSIONS.

GENERAL NOTES

1. THIS SERIES OF DRAWINGS HAS BEEN DEVELOPED FOR THE SOLE PURPOSE OF SERVING AS REFERENCE MATERIALS DURING THE CONSTRUCTION OF CUSTOM MOTORCYCLE FRAMES. DO NOT USE THESE DRAWINGS DURING THE RESTORATION OR REBUILDING OF A STOCK FRAME.
2. BASE REFERENCE DIMENSIONS SHOWN HEREON WERE DERIVED FROM HARLEY-DAVIDSON SHOP DRAWINGS DATED AUGUST 22, 1951 FOR THE REVISED PANHEAD MOTOR INSTALLATION. (OEM 47004-49A).
3. THE FRAMES SHOWN HEREIN ARE INTENDED FOR USE WITH STOCK H.P. ENGINES AND NOT HIGH PERFORMANCE MOTORS. CONSULT THE DESIGNER FOR HIGH PERFORMANCE MODIFICATIONS.
4. FRAMES AND/OR COMPONENTS DEPICTED HEREIN ARE INTENDED TO BE CONSTRUCTED BY SKILLED PROFESSIONAL WELDERS AND FABRICATORS FAMILIAR WITH MOTORCYCLE CONSTRUCTION TECHNIQUES. THE DESIGNER WILL NOT BE RESPONSIBLE FOR DAMAGES THAT RESULT FROM IMPROPER APPLICATION AND INTERPRETATION OF THESE DRAWINGS OR SUB-STANDARD WORKMANSHIP.
5. NOTE THAT UNLESS SPECIFIED OTHERWISE ALL TUBING BENDS ARE BASED UPON A 4.5" CENTERLINE RADIUS.
6. THE VERTICAL DISTANCE BETWEEN THE REAR MOTOR MOUNT PLATE AND THE FRONT TRANSMISSION MOUNT VARIES DEPENDING UPON THE MODEL OF TRANSMISSION AND PLATE BEING USED. FOR STOCK 4-SPEEDS IT IS 3.25", FOR A 5-SPEED MOUNT IT IS USUALLY 2.9375".
THE REAR TRANSMISSION HEIGHT WILL NEED TO BE ADJUSTED AS WELL. PLEASE VERIFY THESE DIMENSIONS AGAINST THE ACTUAL PARTS YOU HAVE ELECTED TO USE.

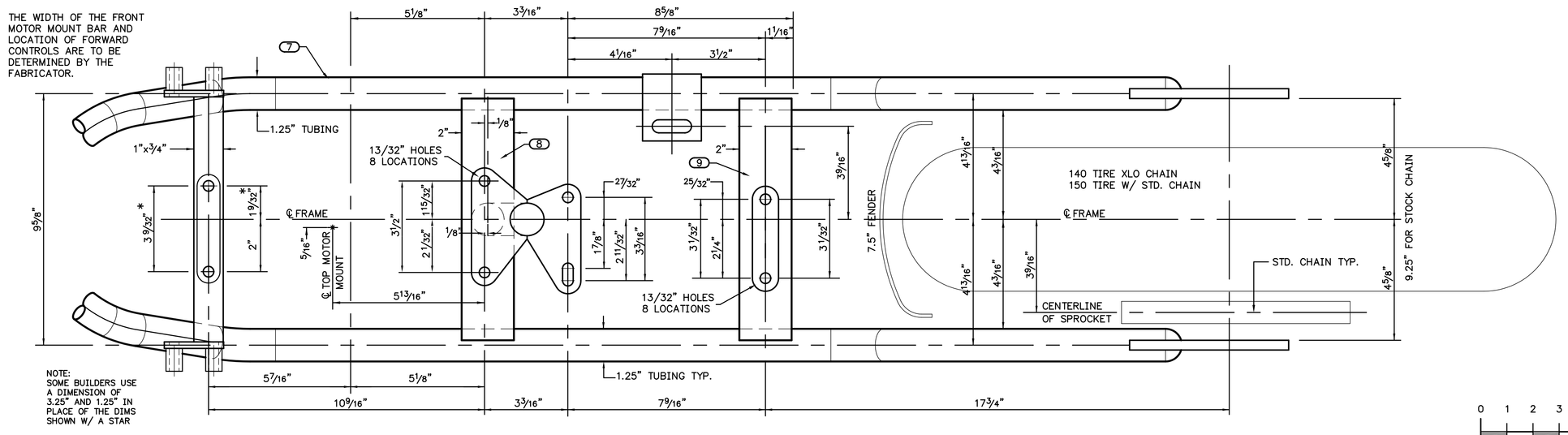

MOTOR MOUNT - PLAN VIEW - STOCK CHAIN DRIVE

SCALE 3/8" = 1"

© 2001, 02, 03, 04, 05 G.W. WEISHAUPT, ALL RIGHTS RESERVED.

GARY W. WEISHAUPT

PERFORMANCE ENGINEERING
CHASSIS FABRICATION
FLOWBENCH TESTING
MACHINE WORK
RESTORATIONS

1490 RIVER PARK BLVD.
NAPA, CALIFORNIA 94559
Ph. 707-252-3427
Fax 707-252-3427
email: gww25@pacbell.net

Revision	Date
* INITIAL LAYOUT	12-7-85
* GENERAL REVISION	9-27-01
* GENERAL REVISION	3-4-03
* GENERAL REVISION	7-4-03
* GENERAL REVISION	2-24-04
* GENERAL REVISION	9-24-04
*	
*	

Project Title

PROTOTYPE RIGID CHOPPER FRAME

WELDING JIG #3 REFERENCE DATA

OLD SCHOOL RIGID

Drawn By	GWW
Date	9-27-04
Checked By	HC
Date	9-27-04
Scale	3/8" = 1"
Plot Scale	.375=1
Project No.	CR140-2-001

Sheet Description

RIGID CHOPPER DIMENSIONS

OLD SCHOOL DESIGN CR-140-2

0 1 2 3 4 5 6

Sheet No.

CR-140-2